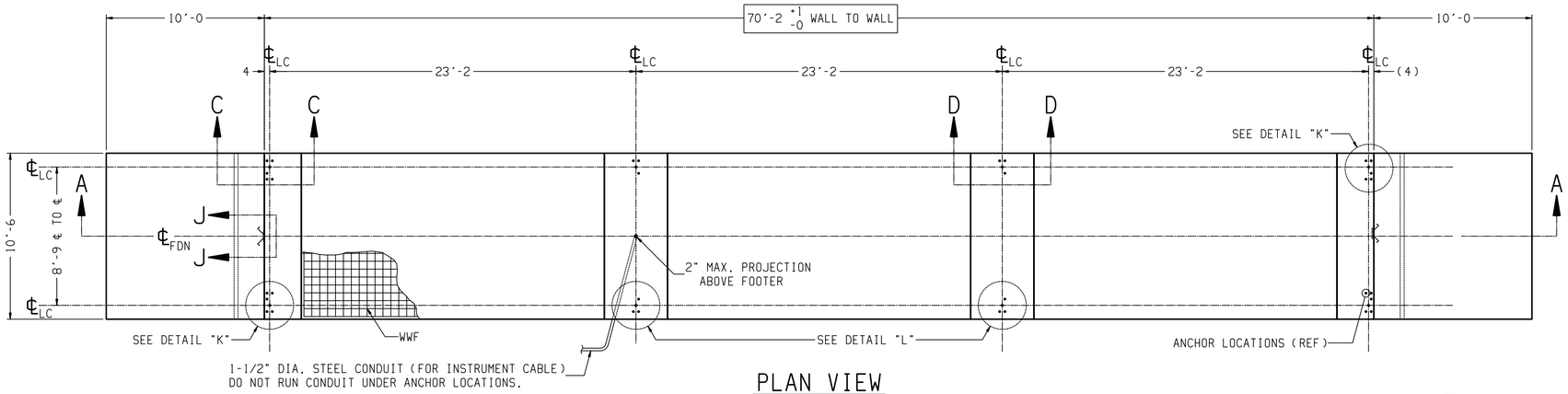

PLAN VIEW

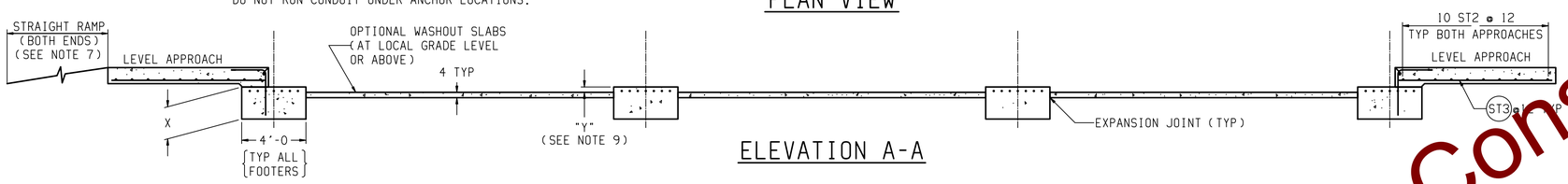

ELEVATION A-A

REINFORCING STEEL SCHEDULE (A.S.T.M. A-615 GRADE 60)						
COLD FORM BARS TO INSIDE DIMENSIONS				A / B		
SYM	QTY	SIZE	LOCATION. DIRECTION	A	B	WGT
ST1	28	#6	FOOTERS. LATERAL	10'-0		421
ST2	4	#5	ENDS. LATERAL	10'-0		42
	20		APPROACHES. LATERAL			209
ST3	24	#5	APPROACHES. LONG.	9'-6		238
L1	24	#5	APPROACH TO END TIES	2'-3	2'-3	113

L1 GIVEN WITHOUT RISER BASEPLATES.
DIMENSION "B" WILL VARY WITH THE ACTUAL HEIGHT OF RISERS USED. AS FOLLOWS:

	L1
NO RISERS	2'-3
3" RISERS	2'-6
6" RISERS	2'-9

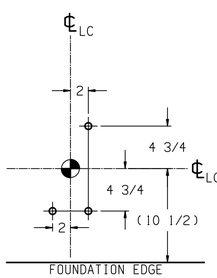

DETAIL "L"

ANCHOR LOCATIONS
(OTHER SIDE IS OPPOSITE)

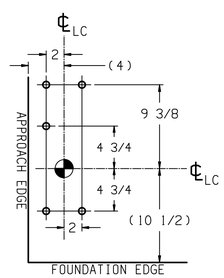

DETAIL "K"

ANCHOR LOCATIONS
(OTHER SIDE IS OPPOSITE)

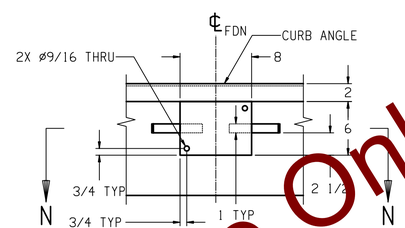

VIEW J-J

BUMPER PLATE ASSY'S (ONE EACH END)
MATERIAL: 1/4" STEEL (BY OTHERS).

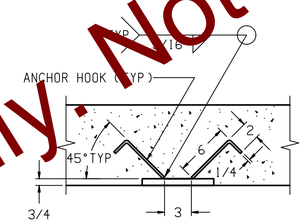

SECTION N-N

MATERIAL SUMMARY * (INCLUDES FOOTERS & APPROACHES) (ASSUMES 12" RISER BASEPLATE)	FOOTER DEPTH: "X" INCHES (24 INCH MINIMUM)				
	24	36	48	60	72
CONCRETE (CU. YDS.)	21	27	33	40	46
REINFORCING STEEL (LBS)	1114				

* IF OPTIONAL WASHOUT SLABS ARE USED. ADD:
600 SQ. FT. OF WWF: 6x6_W1.4xW1.4
8 CU. YD. OF CONCRETE.

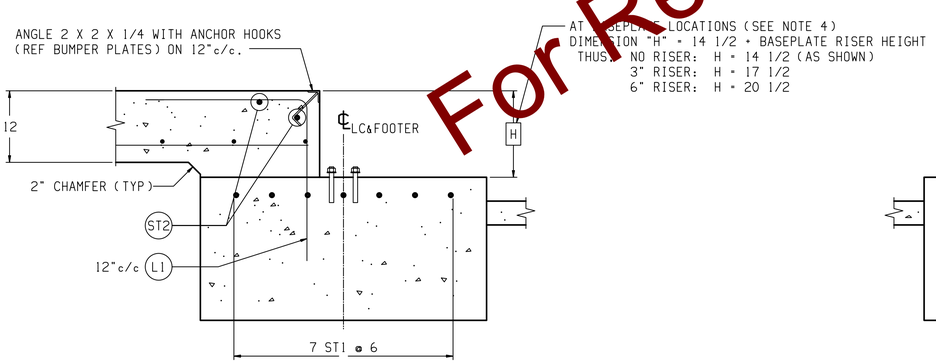

SECTION C-C

SCALE 1/12
(TYPICAL END WALL)

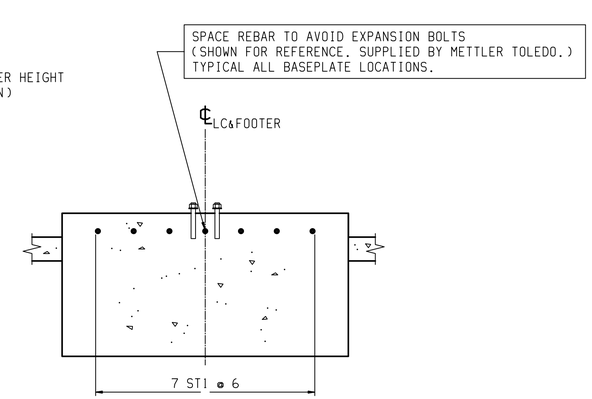

SECTION D-D

SCALE 1/12
(TYPICAL FOOTER)
SINGLE BASEPLATE

NOTES:

1) USE MINIMUM 3000 PSI STRENGTH CONCRETE AT 28 DAYS WITH 5-7% AIR ENTRAINMENT.
2) USE MINIMUM 60KSI YIELD DEFORMED REINFORCING STEEL. REBAR MINIMUM DEPTH OF COVER SHOULD BE IN ACCORDANCE WITH THE LATEST ACI BUILDING CODE REQUIREMENTS FOR STRUCTURAL CONCRETE (ACI 318-SECTION 7.7) UNLESS OTHERWISE SPECIFIED.
3) FOUNDATION REQUIRES 2500 PSF RATED SOIL FOR HIGHWAY TRUCK APPLICATIONS.
4) TOP OF CONCRETE AT BASEPLATE LOCATIONS TO BE LEVEL AND IN ONE PLANE ±1/8"
5) DIAGONAL MEASUREMENTS ENDWALL TO ENDWALL MUST BE EQUAL WITHIN 1/2".
6) BASEPLATE ANCHORS TO BE SUPPLIED BY METTLER-TOLEDO. USE BASEPLATES AS TEMPLATES TO LOCATE EXPANSION BOLTS DURING SCALE INSTALLATION.
7) RAMP LENGTH: -PER LOCAL REGULATIONS
   -1/2" SLOPE PER FOOT TYPICAL
8) BOTTOM OF FOOTER MUST BE BELOW LOCAL FROSTLINE.
9) FOOTER HEIGHT "Y" CAN BE VARIED TO SUIT LOCAL CLEARANCE REQUIREMENTS. TOP OF FOOTER AT GRADE LEVEL, i.e. FLUSH WITH WASHOUT SLABS, PROVIDES STANDARD 3" CLEARANCE BETWEEN BOTTOM OF WEIGHBRIDGE AND WASHOUT SLABS.
10) OPTIONAL: 6" OF GRAVEL MAY BE USED UNDER APPROACHES TO IMPROVE DRAINAGE.
11) CONTRACTOR SUPPLIES:
   -EXCAVATION -CONCRETE AND FORMS
   -REINFORCING STEEL -1 1/2" DIA CONDUIT
   -CURB ANGLE ASSEMBLIES -BUMPER PLATE ASSEMBLIES
   (SECT C-C) (VIEWS J-J & N-N)

DRAWING IS TO SCALE ONLY WHEN BORDER MEASURES 22-7/8" X 35" (FULL SIZE)

REV	CHANGE	BY	DATE
A	ADDED VTS231 TO TITLE & PDX DETAILS	ADF	05/18/10

SCALE .02
DATE 07/23/03
DRN MDP APPD

METTLER TOLEDO

TITLE VTS231/7562C FOUNDATION. 3-MOD.
70' X 10' VARIABLE FOOTER. W/ RISER OPTION

UNLESS OTHERWISE SPECIFIED. ALL DIMENSIONS ARE IN INCHES. AND DIMENSIONAL TOLERANCES ARE:
FRACTIONAL ±1/32 DECIMAL .XX ±.02 .XXX ±.005 ANGULAR ±.5°

THIS PRINT IS FURNISHED WITH THE UNDERSTANDING THAT THE ESSENCE THEREOF WILL NOT BE REPRODUCED IN WHOLE OR IN PART WITHOUT WRITTEN AUTHORIZATION OF METTLER-TOLEDO, INC. ALL DESIGNS ARE THE PROPERTY OF METTLER-TOLEDO, INC. AND WILL BE PROTECTED BY PATENTS.

TC205846 REV A

For Reference Only. Not for Construction.